HIGH PERFORMANCE VERTICAL
MACHINING CENTER FOR DIE / MOLD MACHINE

VM

5400 · 6500

DN SOLUTIONS

VM 5400 · 6500

The efficiency and competitiveness achieved by the user is optimised by the core features which are standard on the machine. These include face / taper contact spindle nose (BBT40), effective spindle cooling system and air blower for chip removal when dry cutting. These features contribute to the machine's capability to produce high quality dies and moulds.

HIGH RIGIDITY STRUCTURE

- The arch style minimizes deformation during heavy duty cutting and maintains stable precision levels.

HI-SPEED, HI-PRECISION SPINDLE

- High torque 15.6 kW serial spindle motor ensures stable precision levels in machining metal molds.

CONVENIENCE IMPROVEMENTS FOR OPERATOR

- Various chip handling devices are provided for enhanced user convenience.

BASIC STRUCTURE

In addition to higher durability and an excellent vibration absorption feature, the static stiffness and dynamic stiffness have been improved by 30%, thanks to the Finite Element Method (EFM).

High Rigidity

The highly-rigid body found on the VM series enables exceptionally heavy-duty machining.

High Rigidity Design

High Rigidity construction is achieved by 3D computer simulation.

Static rigidity

The high rigidity structure of VM series has raised the static rigidity up by 30% more than previous model with no weak point through FEM analysis.

Dynamic rigidity

Improving the frequency response and the damping ability of vibration makes it possible to increase the high eigenfrequency 30% up on the previous model.

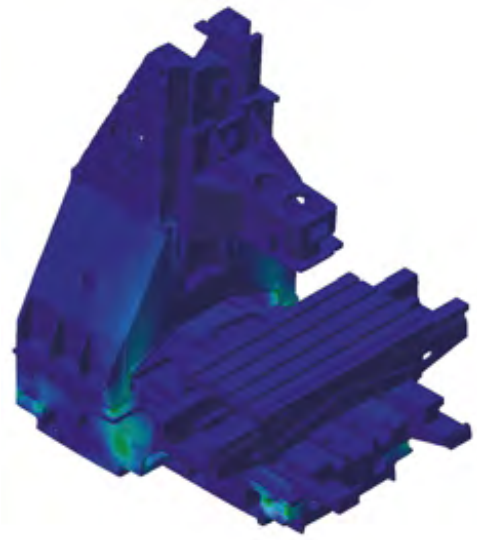

The highly-rigid body structure is obtained by using the latest FEM analysis method, which optimizes the static and dynamic stiffness characteristics of the VM series. The resulting arch-shaped body structure provides an unrivalled level of rigidity, enabling an unsurpassed performance in heavy-duty machining.

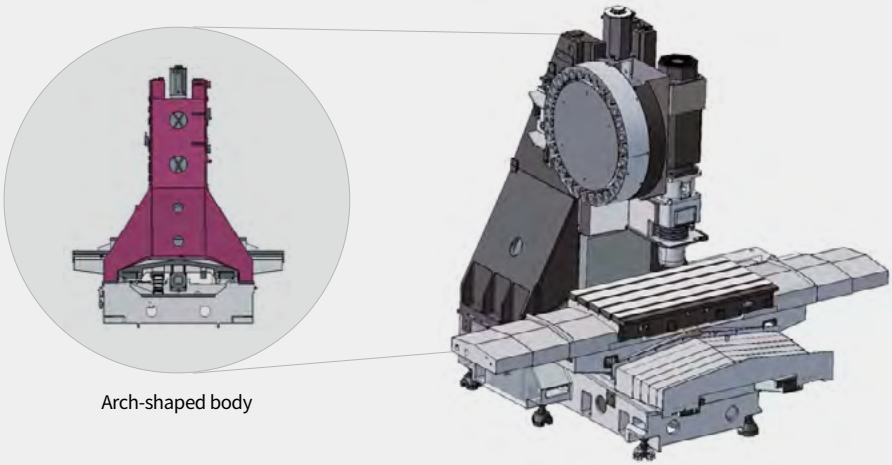

Broader Box Guideways

Compared to the previous models, the broader box guideways greatly improve the machine's dynamic characteristics.

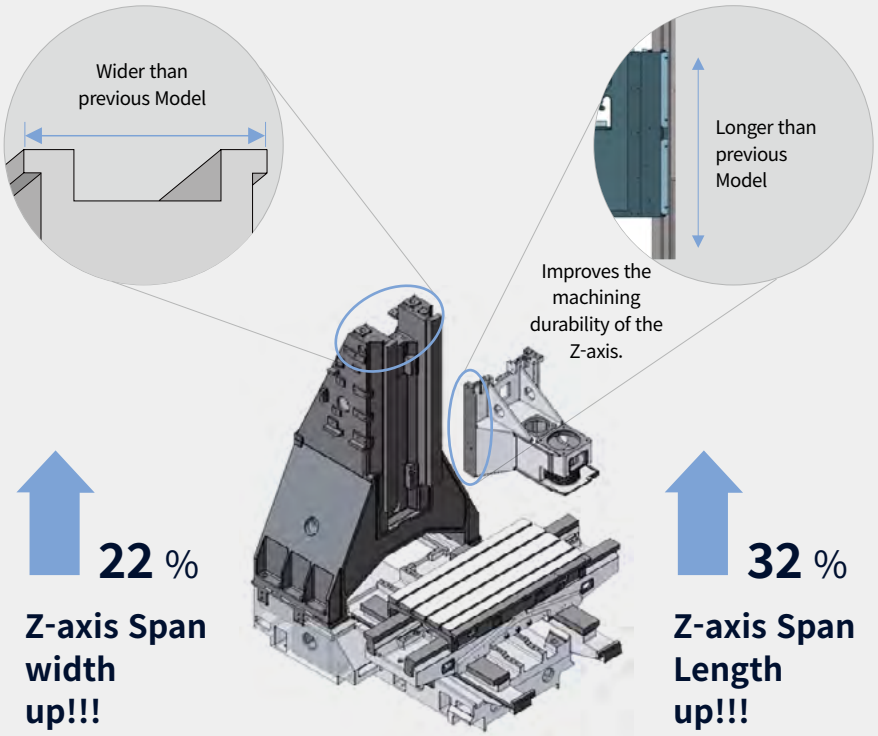

Scraping of surface

The sliding surface of each guideway is bonded with Rulon® 142 to reduce friction, then hand scraped for a perfect fit.

SPINDLE

The unsurpassed quality and accuracy of the VM series achieves world-class performance in the machining of die & mold products.

Spindle motor power

15.6 kW 20.9 Hp

Max. spindle speed

12000 r/min

High Speed / Precision Built-in Spindle

Since the main spindle is supported by 4 rows of P4 level high precision bearings, it maintains stable precision under high speed cutting operation for long periods. Moreover, the high torque 15.6 kW (20.9 Hp) direct connection type main spindle motor is equipped for high speed mold processing.

Direct-coupled Spindle

Minimization of direct-connectiontype main spindle thermal deformation

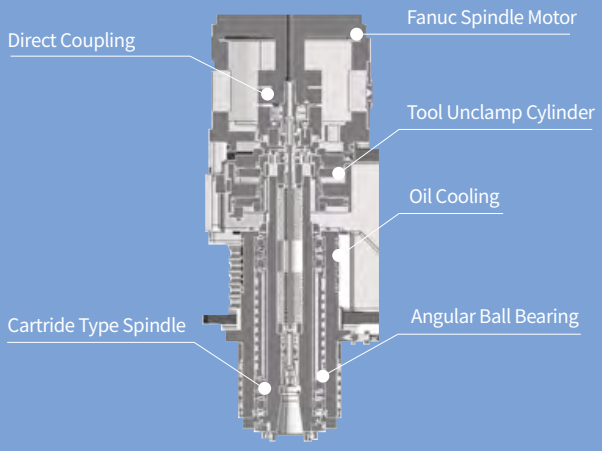

Low friction and heat generation of main spindle

Main spindle head cooling system

Actualization of low noise in accordance with adoption of special grease lubrication for main spindle cooling device and dramatic reduction of compressed air consumption allows minimization of main spindle thermal deformation.

Face / taper contact spindle (BBT40)

Common utilization of BT40 Tool and 2-face binding tool (BIG PLUS)

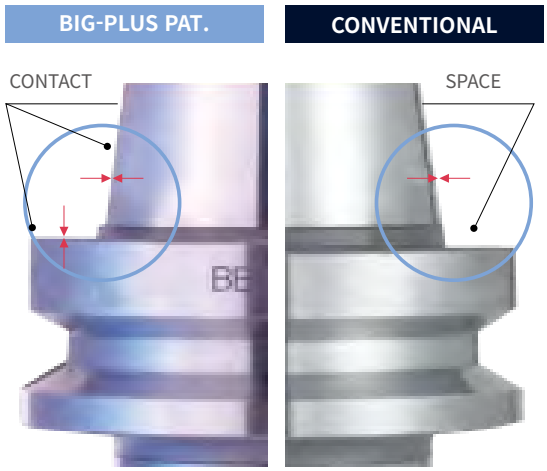

MACHINING PERFORMANCE

Cutting Performance

The VM series provides high machining performance in various cutting processes.

VM 5400

Face mill (ø80mm) Carbon steel (SM45C)

Machining rate (cm^3/min(in^3/min))	Spindle speed (r/min)	Feedrate (mm/min (ipm))
427 (16.8)	750	2226 (87.6)

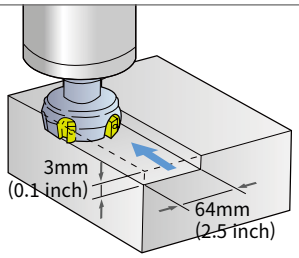

Face mill (ø80mm) Gray Casting (GC25)

Machining rate (cm^3/min(in^3/min))	Spindle speed (r/min)	Feedrate (mm/min (ipm))
732 (28.8)	1060	2544 (100.2)

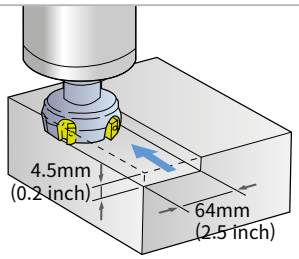

Face mill (ø80mm) Aluminum (AL6061)

Machining rate (cm^3/min(in^3/min))	Spindle speed (r/min)	Feedrate (mm/min (ipm))
1728 (68.0)	6000	9000 (354.3)

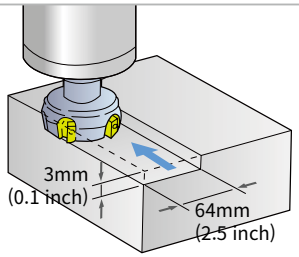

Tap BT40 Carbon steel (SM45C)

Tool (mm)	Spindle speed (r/min)	Feedrate (mm/min (ipm))
M30 x P3.5	220	770 (30.3)

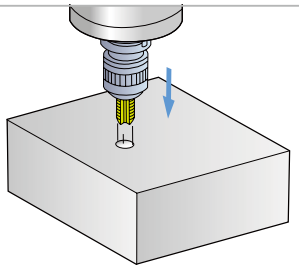

Tap BT40 Gray Casting (GC25)

Tool (mm)	Spindle speed (r/min)	Feedrate (mm/min (ipm))
M30 x P4.0	200	800 (31.5)

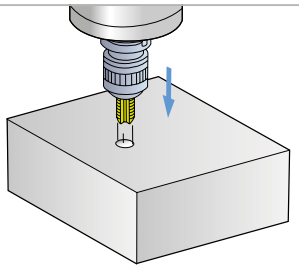

** The results, indicated in this catalogue are provides as example. They may not be obtained due to differences in cutting conditions and environmental conditions during measurement.*

OPTIMIZED TOOL PROCESSING SOLUTION

Superior surface finishes and machining accuracy are achieved through using standard processing solutions such as high-speed / high - precision contour control and thermal displacement compensation.

High speed / high precision contour control

- **DSQ1** (AICC2 _ 200 Block + Machining condition selection function)
- **DSQ2** option (DSQ1 + Data server [1GB])
- **DSQ3** option (DSQ2 + High speed processing _ 600 Block)

*DSQ : DN Solutions Super Quality

Tool load monitoring system (DTMM*)

The technology of protecting tool and machine in abnormal load during the cutting process

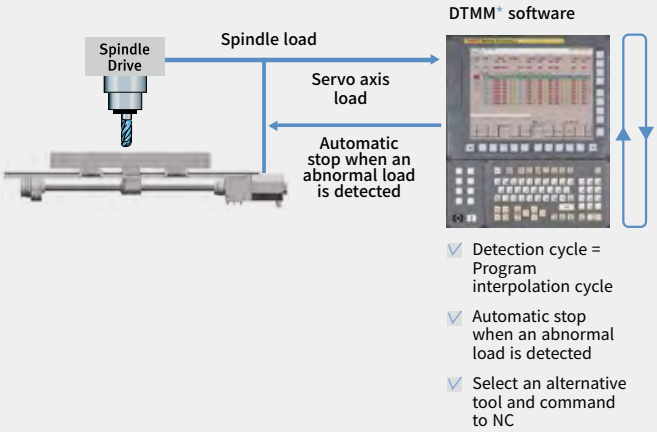

*DTMM : DN Solutions Tool load Monitoring for Machining Centers

The optimal feed control (DAFC*)

Optimal feed control is ensured by realtime spindle load detection.

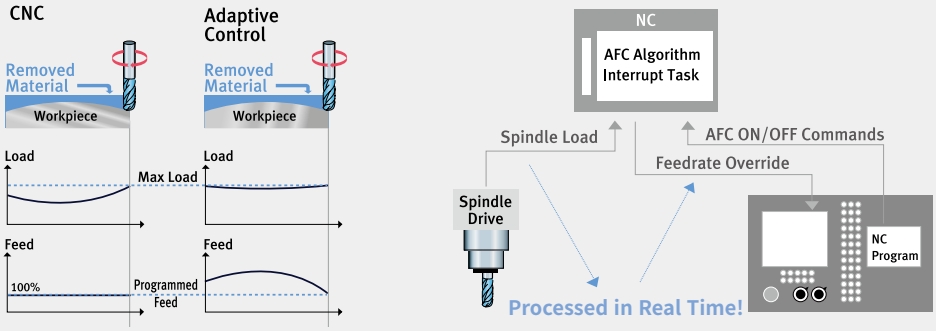

*DAFC : DN Solutions Adaptive Feedrate Control

Machining condition selection function

- It is possible to change machining condition in 10 steps by using R code at the program.
  ▶ Improving productivity (high speed at rough machining, high precision at precision machining)
- NC parameter such as maximum feed and accelation time constant can be set automatically.

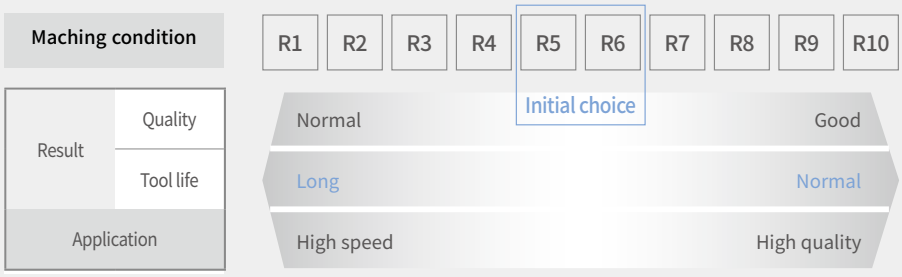

DIE & MOLD SOLUTION

The VM Series provides ultra-precise machining capability using high speed / precision contour feed control and the optimum machine stability.

High speed / Precision contour control

Die & Mold Solution

DSQ High speed / Precision contour control

AICC
+
Machining condition selection function
+
High speed data Server option

DAFC Feed control option

Single load
+
Feederate overide
+
DAFC on/off command

Data Server & Risc Board

With a mounted mass storage data server and CPU, it is possible for high end processing of mass storage programs.

DSQ package upgrades productivity and mold processing quality with individual tuning of machinery features, high speed processing by mass storage programs and enhanced superb command following capacity.

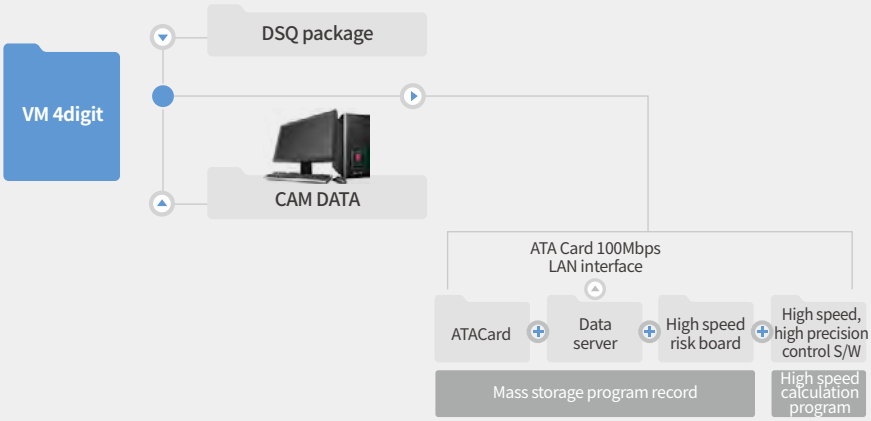

The comparison of cycle time (actual result)

Cycle time of rubber die machining

A competitor's machine	42hr 20min
VM 5400	**37hr 50min**

12 % up

PDA mold processing

A competitor's machine	1hr 48min 38s
VM 5400	**1hr 23min 29s**

12 % up

VASE (Verification sample) cycle time

A competitor's machine	25min 42s
VM 5400	**23min 26s**

8 % up

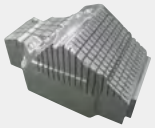

Air filter mold processing

A competitor's machine	89hr 42min
VM 5400	**80hr 55min**

10 % up

STANDARD | OPTIONAL SPECIFICATIONS

A range of options is available to suit individual requirements.

Description	Features			VM 5400	VM 6500
Spindle	12000 r/min		15.6/15.6kW , 165.5 N.m	●	●
Magazine	Tool storage capacity		30	●	●
			40	○	○
	Tool shank type		ISO #40	●	●
Coolant	FLOOD		0.19MPa(0.4kW)	●	●
			0.69MPa(1.8kW)	○	○
	TSC*		None	●	●
			2MPa(1.5kW)	○	○
			2MPa(4kW)	○	○
			7MPa(5.5kW)	○	○
	SHOWER			○	○
Chip disposal	CHIP PAN		-	●	●
	CHIP CONVEYOR	TYPE	HINGED PLATE	○	○
			MAGNETIC SCRAPER	○	○
		OUTLET DIRECTION	RIGHT SIDE	○	○
			LEFT SIDE	○	○
	CHIP BUCKET	CAPACITY	300 L	○	○
		TYPE	ROTATION	○	○
			FORKLIFT	○	○
Precision machining option	Linear scale		X / Y / Zaxis	○	○
	DSQ 1 (AICC II_200 blocks)			●	●
	DSQ 2 (DSQ 1 & Data server 1GB)			○	○
Measurement & Automation	Automatic tool measurement			○	○
	Automatic tool breakage detection			○	○
	Automatic workpiece measurement			○	○
ACCESSORIES	WORK LIGHT		LED LAMP	●	●
	OPERATOR CALL LAMP		3-COLOR SIGNAL TOWER(LED)	●	●
	LEVELING BLOCK & BOLT			○	○
	SMART THERMAL CONTROL		SENSORLESS TYPE(ONLY SPINDLE)	●	●
	ASSEMBLY & OPERATION TOOLS KIT			●	●
	AIR BLOWER			●	●
	4TH AXIS PREPARATION CABLING FOR SERVO/1-PNEUMATIC PIPING		FACTORY READY MADE	○	○
	AIR GUN			○	○
	Coolant gun			○	○
Customized Special Option	ANCHORING(1)		SIDE CLAMP & CHEMICAL ANCHOR BOLT	○	○
	COOLANT CHILLER(2)			○	○
	TSA(3)		0.54	○	○
	FEEDBACK SYSTEM	X AXIS	HEIDENHAIN	○	○
		Y AXIS	HEIDENHAIN	○	○
		Z AXIS	HEIDENHAIN	○	○
	RAISING BLOCK		150 mm	○	○
			200 mm	○	○
			300 mm	○	○
	CHIP CONVEYOR		DRUM CHIP CONVEYOR WITH HINGED PLATE	○	○
			DRUM CHIP CONVEYOR WITH SCRAPER	○	○
			OUTLET DIRECTION - REAR SIDE TYPE	○	○
	FINE DUST PROTECTING PACKAGE	WET MACHINING	BELLOWS COVER(X/Y/Z)	○	○
			PROTECT COVER(X-AXIS)	○	○
			BALL SCREW BELLOWS COVER(X/Y)	○	○
			GUIDE WAY DOUBLE WIPER	○	○
		DRY MACHINING	PROTECT COVER(X-AXIS)	○	○
			BALL SCREW BELLOWS COVER(X/Y)	○	○
			GUIDE WAY DOUBLE WIPER	○	○
			ATC FULL CLOSED COVER	○	○
	SIDE AUTO DOOR		680 X 1000 (W X H)	○	○
	AWC		8PALLET	○	○
	AUTO TOOL LENGTH MEASUREMEMT		RENISHAW / LTS	○	○
	AUTO TOOL BREAKAGE DETECTION		MSC/BK9(NEEDLE TYPE ON MAGAZINE)	○	○

** Please contact DN Solutions to select detail specifications.*

● *Standard* ○ *Optional* x *Not applicable*

**If this option is selescted, the TSA(Through Spindle Air) function available. TSA Max.pressure is 0.54MP*

***When using a semi-synthetic type or synthetic type, contact our sales representative or service center in advance.*

(1) Please refer to foundation drawing in relation to anchoring. If more detail information want, consult with DN Solutions service

(2) In case of using neat cutting oil, this device is highly recommended in order to reduce the change of accuracy by rising the coolant temperatures.

(3) In case of TSC is not required and only TSA is needed, this option can be selected.

Fire Safety Precautions | *There is a high risk of fire when using non-water-soluble cutting fluids, processing flammable materials, neglecting the controlled and careful use of coolants and modifying the machine without the consent of the manufacturer. Always check the SAFETY GUIDELINES carefully before using the machine.*

PERIPHERAL EQUIPMENT

Deliver excellent performance on diverse machining conditions.

Chip Disposal

Inner structure for effective chips and coolant flow

The inner structure of the VM series machines is designed to lead the flow of chips and coolant into a front-mounted chip pan for effective chip disposal.

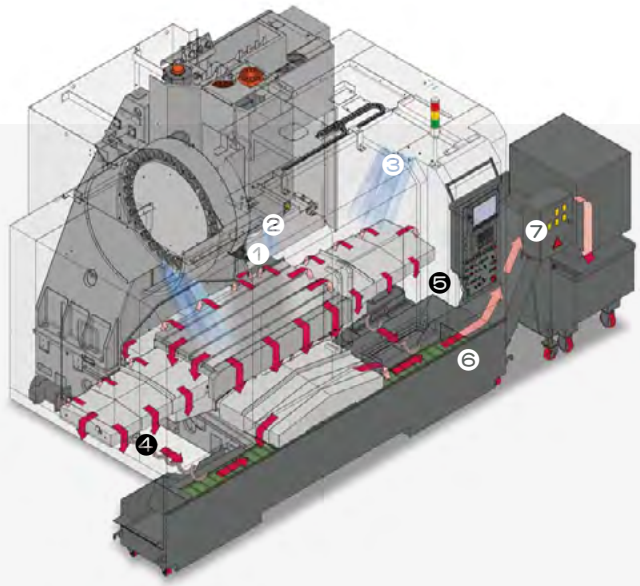

1.
Through spindle coolant option

Middle pressure: 1.96 MPa (284.2 psi) (20 bar)
High pressure: 6.86 MPa (994.7 psi) (70 bar)

※ Measured at pump outlet with 60Hz power.

2.
Flood coolant

3.
Shower coolant option

4.
Internal screw conveyor

5.
Coolant Gun option

6.
Larger Coolant Tank Capacity

Previous Model		VM series	
VM 510	300ℓ	VM 5400	380ℓ
VM 650	300ℓ	VM 6500	380ℓ

7.
Chip conveyor option

Hinge type | Scraper type | Drum filter type

Others Function

Z-axis free fall prevention function

Prevention of damage caused by Z axis freefall following power shutdown is included as standard.

Air Blower

Dry processing and easy MQL connection

FANUC 32i PLUS

Fanuc 32i Plus maximizes customer productivity and convenience.

15" Touch screen + New OP

DN Solutions Fanuc 32i Plus' operation panel enhances operating convenience by incorporating common-design buttons and layout. It features a Qwerty keyboard for fast and easy data input and operation.

Fanuc 32i Plus

- 15-inch color display
- Intuitive and user-friendly design

USB and PCMCIA card QWERTY keyboard

- EZ-Guide i standard
- Ergonimic operator panel
- 4MB Memory
- Hot keys
- Enhance AICC BLOCK
- Touch pen provided as standard

iHMI touchscreen

iHMI provides an intuitive interface that uses a touchscreen for quick and easy operation.

Range of applications

Providing various applications related to planning, machining, improvement and utility, for customer convenience.

NUMERIC CONTROL SPECIFICATIONS

FANUC

Item		Specifications	F32iB Plus VM 5400 / VM 6500
Controlled axis	Controlled axes		5 (X,Y,Z)
	Simultaneously controlled axes		5 axes
	Additional controlled Axis	Add 1 Axis (5th Axis)	●
Data input/output	Fast data server		○
	Memory card input/output		●
	USB memory input/output		●
	Large capacity memory(2GB)*2	Available Option only with 15" Touch LCD (iHMI Only) *2)	○
Interface function	Embedded Ethernet		●
	Fast Ethernet		○
	Enhanced Embedded Ethernet function		●
Operation	DNC operation	Included in RS232C interface.	●
	DNC operation with memory card		●
Program input	Workpiece coordinate system	G52 - G59	●
	Addition of workpiece coordinate system	G54.1 P1 X 48 (48 pairs)	●
	Tool number command		T4 digits
	Tilted working plane indexing command	G68.2 TWP	○
Feed function	AI contour control I	G5.1 Q_, 40 Blocks	X
	AI contour control II	G5.1 Q_, 200 Blocks	X
	AI contour control II	G5.1 Q_, 600 Blocks	●
	AI contour control II	G5.1 Q_, 1000 Blocks *1)	X
	High smooth TCP		X
Operation guidance function	EZ Guidei (Conversational Programming Solution)		●
	iHMI with Machining Cycle	Only with 15" Touch LCD standard *2)	X
	EZ Operation package		●
Setting and display	CNC screen dual display function		●
Network	FANUC MTConnect		✪
	FANUC OPC UA		✪
Others	Display unit	10.4" color LCD	X
		15" color LCD	X
		15" color LCD with Touch Panel	●
	Part program storage size & Number of registerable programs	640M(256KB)_500 programs	X
		1280M(512KB)_1000 programs	○
		2560M(1MB)_1000 programs	○
		5120M(2MB)_1000 programs	○
		10240M(4MB)_1000 programs	●
		20480M(8MB)_1000 programs	○
		2560M(1MB)_2000 programs	○
		5120M(2MB)_4000 programs	○
		10240M(4MB)_4000 programs	○
		20480M(8MB)_4000 programs	○

**1) The number of look-ahead blocks may be changed or limited depending on the peripheral device or the configuration of the internal NC system.*
**2) Available Option only with Fanuc i plus iHMI*

● Standard ○ Optional X N/A ✪ Available
Network: FANUC MT Connect and FANUC OPC UA available.

EZ WORK

The software developed by DN Solutions features numerous functions designed for convenience and ease of operation.

EZ work

The EZ work delivers speed and efficiency. This menu-driven innovation not only helps customers reduce setup times, but also simplifies common tasks and procedures, reducing the potential for errors. EZ work reduces operating time, protects machinery, enhances quality and speeds up maintenance interventions.

Tool Load Monitor

Function to automatically monitor tool load (Dierent loads can be set for one tool according to M700 ~ M704)

M/G-Code List

Functional description of M code and G code

Tool Management

Function to manage tool information [Tool information / Tool No. / Tool condition (normal, large diameter, worn / damaged, used for the rst time, manual) / Tool name]

Operation Rate

Machine operation history management function by date based on load

Adaptive Feed Control

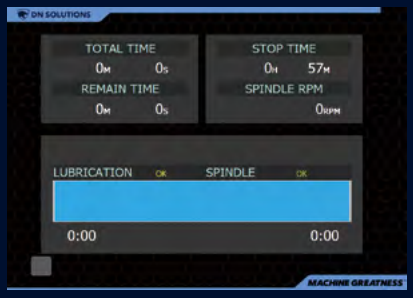

Spindle Warm Up

A function that assists spindle warm-up for spindle life when the spindle has not been used for a certain period of time

ATC Recovery

Function to view detailed info with recommended actions and to perform step-by-step operation manually (when an alarm is triggered during an ATC operation)

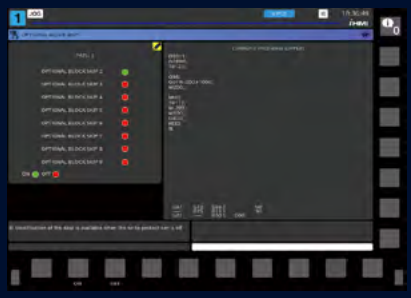

Addition of Optional Block Skip

In addition to the OPTIONAL BLOCK SKIP of the operation panel, the function to skip a specific block selected in the machining program

EZ WORK

Easy operation

Operator convenience and work efficiency have been improved with adoption of various convenient control functions and ergonomic design.

Operating console

1.
10.4" Color TFT LCD Monitor as Standard Feature

The wide screen displays more useful infromation for the operator. DN Solutions's customized pages make setting up, operating, and machine conditionmonitoring easier.

2.
Pentium Board is standard.

3.
Portable MPG

It makes workpiece setting easier for the operator

4.
Easier ATC operation and maintenance.

It gives much easier operation and maintenance for ATC.

Magazine : CW
Magazine : CCW

5.
PCMCIA Card

6.
Embedded Ethernet / RS-232C

7.
Swivelling Operating Console

The easy-to-use operation panel can swivel 0-90°

Accessibility

It is designed for easy install the workpiece by improving the operator's accessibility.

A	VM 5400	mm (inch)	830 (32.7)
	VM 6500	mm (inch)	895 (35.2)
B	VM 5400	mm (inch)	290 (11.4)
	VM 6500	mm (inch)	224 (8.8)
C	VM 5400	mm (inch)	950 (37.4)
	VM 6500	mm (inch)	950 (37.4)

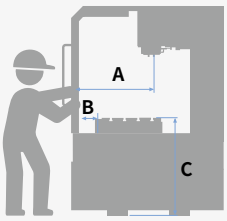

Workpiece Loading

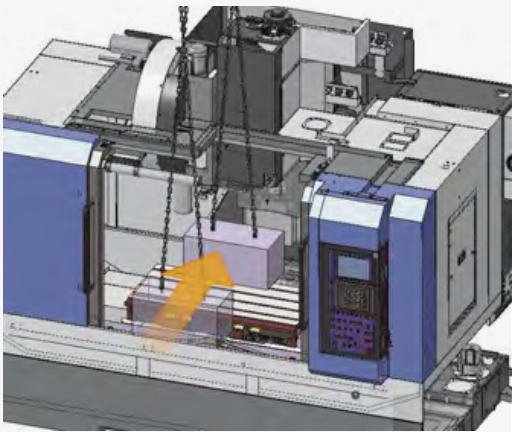

CONVENIENT OPERATION

HEIDENHAIN TNC640

Superior hardware specifications

The TNC 640 features optimized motion control, short block processing times and special control strategies. Together with its uniform digital design and its integrated digital drive control (including inverters), it enables you to achieve high machining speeds and the best possible contour accuracy.

- 15.6" display
- 21GB Storage memory
- 500 look ahead blocks
- High user convenience with folder structure data management

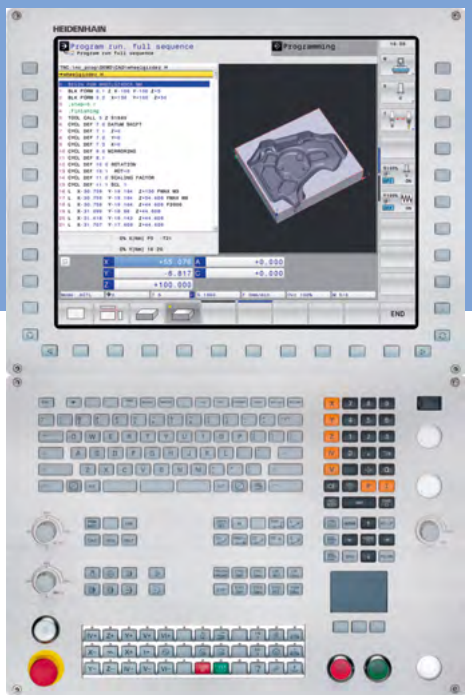

Conversational convenient function

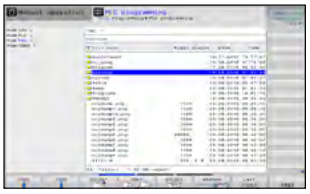

Data are controlled in the folder structure; convenient communication via USB devices

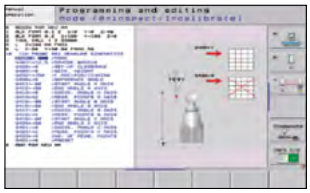

KinematicOpt & KinematicComp option (Touch probe cycle for automatic measurement)

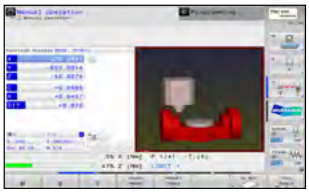

Collision protection system option

Adaptive feed control option

Various built-in pattern cycles for a wider scope of application (Software standard)

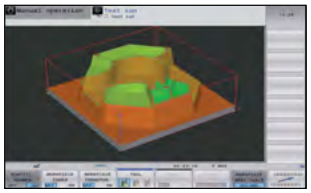

Graphic simulation

NUMERIC CONTROL SPECIFICATIONS

HEIDENHAIN

Item		Specifications	TNC640 VM 5400 VM 6500
Controlled axis	Controlled axis		3 (X,Y,Z)
	Simultaneously controlled axis		4 axis
Data input/output	USB memory input/output		●
Interface function	Embedded ethernet		●
Feed function	Look-ahead	5000 blocks	●
Axis compensation	KinematicsOpt	Automatic measurement and optimization of machine kinematics	○
Collision monitoring	Dynamic collision monitoring (DCM)		X
Network	MTConnect		✪
Others	Display unit	15.1 inch TFT color flat panel	●
		15.1 inch TFT color with Touch Panel	○
		19 inch TFT color flat panel	○
		19 inch TFT color with Touch Panel	○
	Part program storage size & number of registerable programs	21GB	●
		1.8GB	X

● *Standard* ○ *Optional* X *Not Available* ✪ *Available*

POWER | TORQUE

Power | Torque

Max. spindle speed : **12000** r/min

Spindle motor : **15.6** kW
20.9 Hp

Power torque : **165.6** N·m
122.2 ft·lb

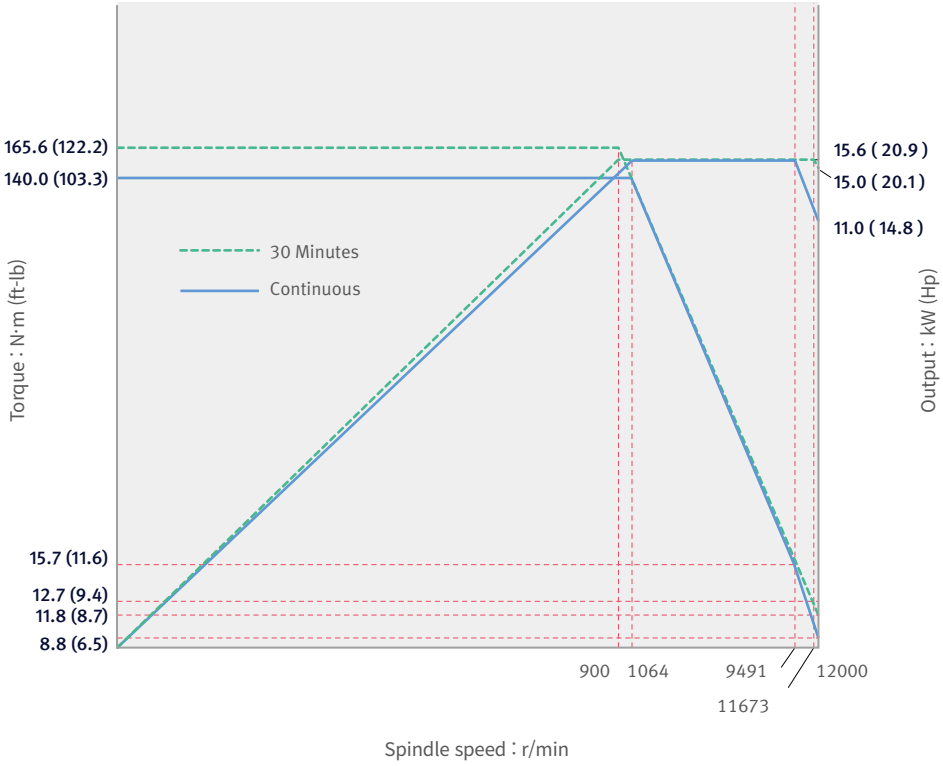

TABLE

Units : mm (inch)

VM 5400

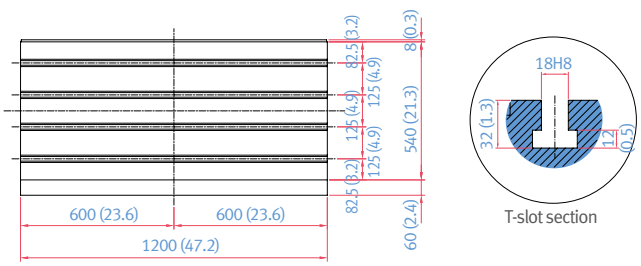

VM 6500

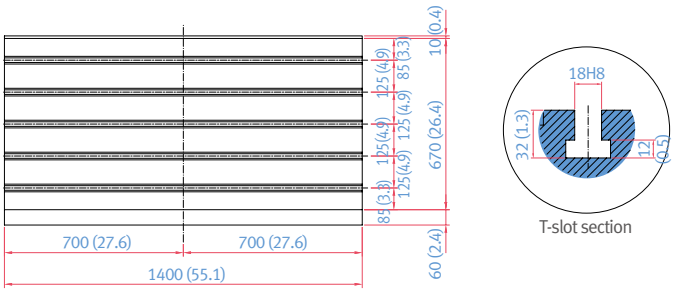

DIMENSIONS

VM 5400

Units : mm (inch)

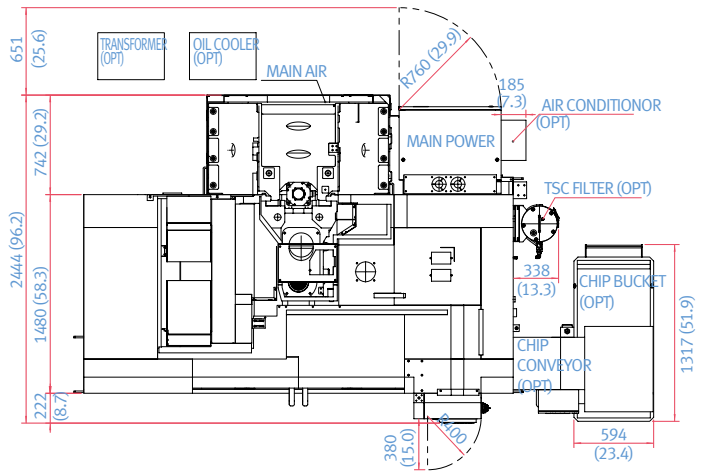

TOP

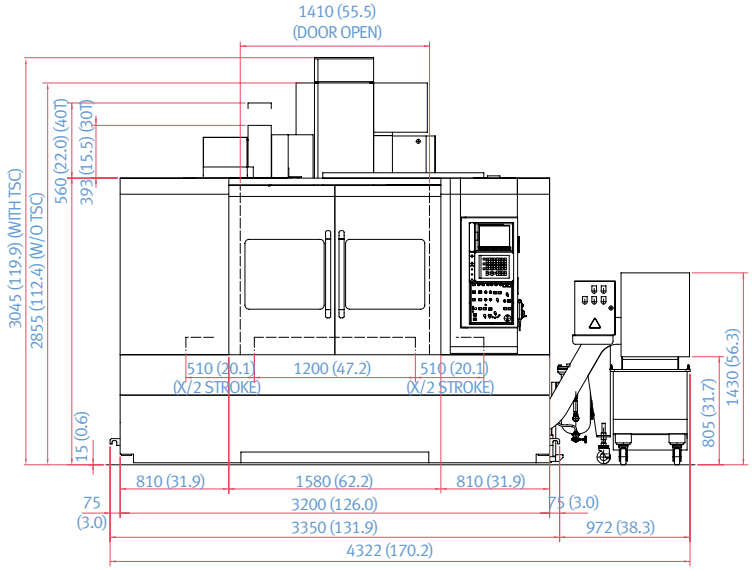

FRONT

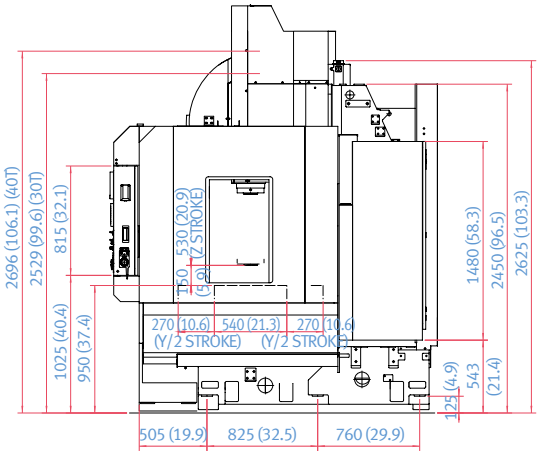

SIDE

* Some peripheral equipment can be placed in other areas.

DIMENSIONS

VM 6500

Units : mm (inch)

TOP

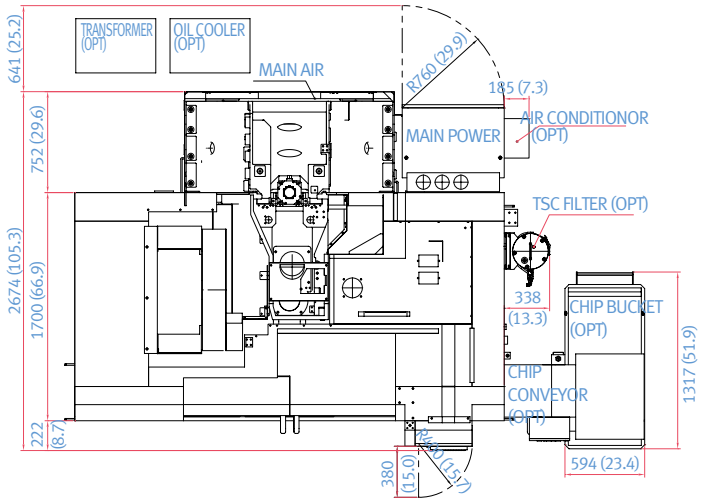

FRONT

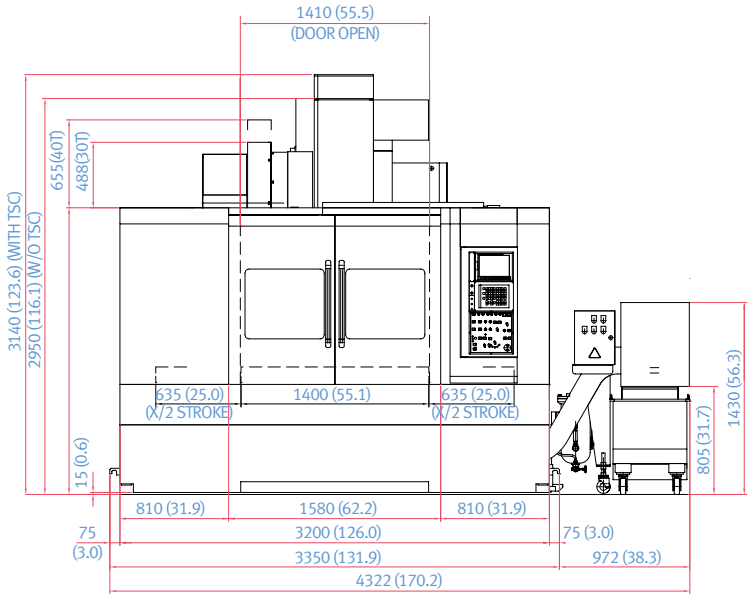

SIDE

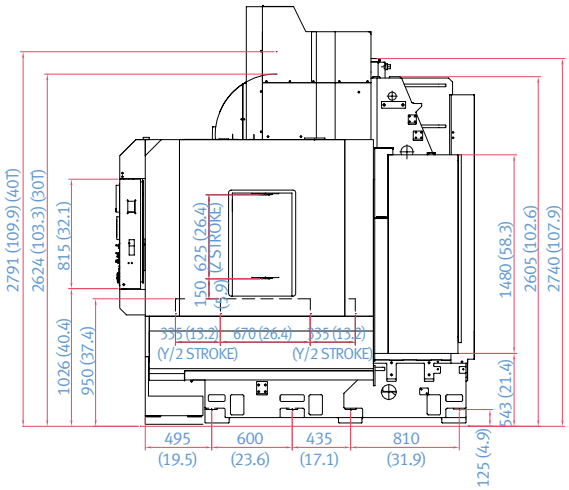

* Some peripheral equipment can be placed in other areas.

MACHINE SPECIFICATIONS

Description			Unit	VM5400	VM6500
Travel	Travel distance	X-axis	mm (inch)	1020 (40.2)	1270 (50.0)
		Y-axis	mm (inch)	540 (21.3)	670 (26.4)
		Z-axis	mm (inch)	530 (20.9)	625 (24.6)
	Distance from spindle nose to table top		mm (inch)	150 ~ 680 (5.9 - 26.8)	150 ~ 775 (5.9 - 30.5)
	Distance from spindle nose to column		mm (inch)	676 (26.6)	772 (30.4)
Feedrate	Rapid feedrate (X, Y, Z)		m/min (ipm)	30 / 30 / 24 (1181.1 / 1181.1 / 944.9)	
	Cutting feedrate		m/min (ipm)	12000 (472.4)	
Table	Table size		mm (inch)	1200 × 540 (47.2 × 21.3)	1400 × 670 (55.1 × 26.4)
	Loading capacity		kg (lb)	800 (1763.7)	1000 (2204.6)
Spindle	Max. spindle speed		r/min	12000	
	Taper		-	ISO #40 7/24 Taper	
	Max. torque		N·m (ft-lbs)	165.6 (122.2)	
ATC	Type of tool shank		-	MAS406-BT40	
	Tool storage capacity		ea	30 {40}	
	Max. tool dia. (when a nearest port is empty)		mm (inch)	80 [150], 76 [150] * (3.1 [5.9], 3.0 [5.9]) *	
	Max. tool length		mm (inch)	300 (11.8)	
	Max. tool weight		kg (lb)	8 (17.6)	
	Max. tool moment		N·m (ft-lbs)	5.88 (4.3)	
	Tool selection type		-	Random	
	Tool change time (tool to tool)		s	1.3	
	Tool change time (chip to chip)		s	3.7	
Motor	Spindle motor power (30 min)		kW (Hp)	15.6 (20.9)	
Power Consum-ption	Electric power		kVA	40	45.1
	Compressed air pressure		NL/min	250	
Control	Height (H)		mm (inch)	F_3012 (118.6) / H_3117 (122.7)	F_3107 (122.3) / H_3216 (126.6)
	Dimension (L×W)		mm (inch)	2444 × 3350 (96.2 × 131.9)	2674 × 3350 (105.3 × 131.9)
	Weight		kg (lb)	7000 (15432.1)	9000 (19841.3)

{ } : option
** 40 Tools*

RESPONDING TO CUSTOMERS
ANYTIME, ANYWHERE

DN Solutions Global Network

DN Solutions provides systems-based professional support services, before and after the machine tool sale, by responding quickly and efficiently to customers. By supplying spare parts, product training, field service and technical support, we provide the expert care, attention and assistance our customers expect from a market leader.

Global sales and service support network		51	**Technical centers** Technical center, Sales support, Service support, Parts support
4	Corporations	200	Service posts
155	Dealer networks	3	Factories

CUSTOMER SUPPORT AND SERVICES

We're there for you whenever you need us.

We help our customers operate at maximum efficiency by providing them with a range of tried, tested and trusted services - from pre-sales consultancy to post-sales support.

Field services

- On-site service
- Machine installation and testing
- Scheduled preventive maintenance
- Machine repair service

Parts supply

- Supplying a wide range of original DN Solutions spare parts
- Parts repair service

Training

- Programming, machine setup and operation
- Electrical and mechanical maintenance
- Applications engineering

Technical support

- Supports machining methods and technology
- Responds to technical queries
- Provides technical consultancy

dn-solutions.com

Head Office
22F T Tower, 30, Sowol-ro 2-gil
Jung-gu, Seoul, Korea, 04637
Tel +82-2-6972-0370/0350
Fax+82-2-6972-0400

DN Solutions America
19A Chapin Road, Pine Brook
New Jersey 07058, United States
Tel: +1-973-618-2500
Fax:+1-973-618-2501

DN Solutions Europe
Emdener Strasse 24, D-41540
Dormagen, Germany
Tel: +49-2133-5067-100
Fax:+49-2133-5067-111

DN Solutions India
No.82, Jakkuar Village
Yelahanka Hobil, Bangalore-560064
Tel: + 91-80-2205-6900
E-mail: india@dncompany.com

DN Solutions China
Room 101,201,301, Building 39 Xinzhuan
Highway No.258 Songjiang District
China Shanghai (201612)
Tel: +86 21-5445-1155
Fax:+86 21-6405-1472

Sales inquiry
sales@dncompany.com

* For more details, please contact DN Solutions.

* Specifications and information contained within this catalogue may be changed without prior notice.

DN SOLUTIONS

ver. EN 230224 SU